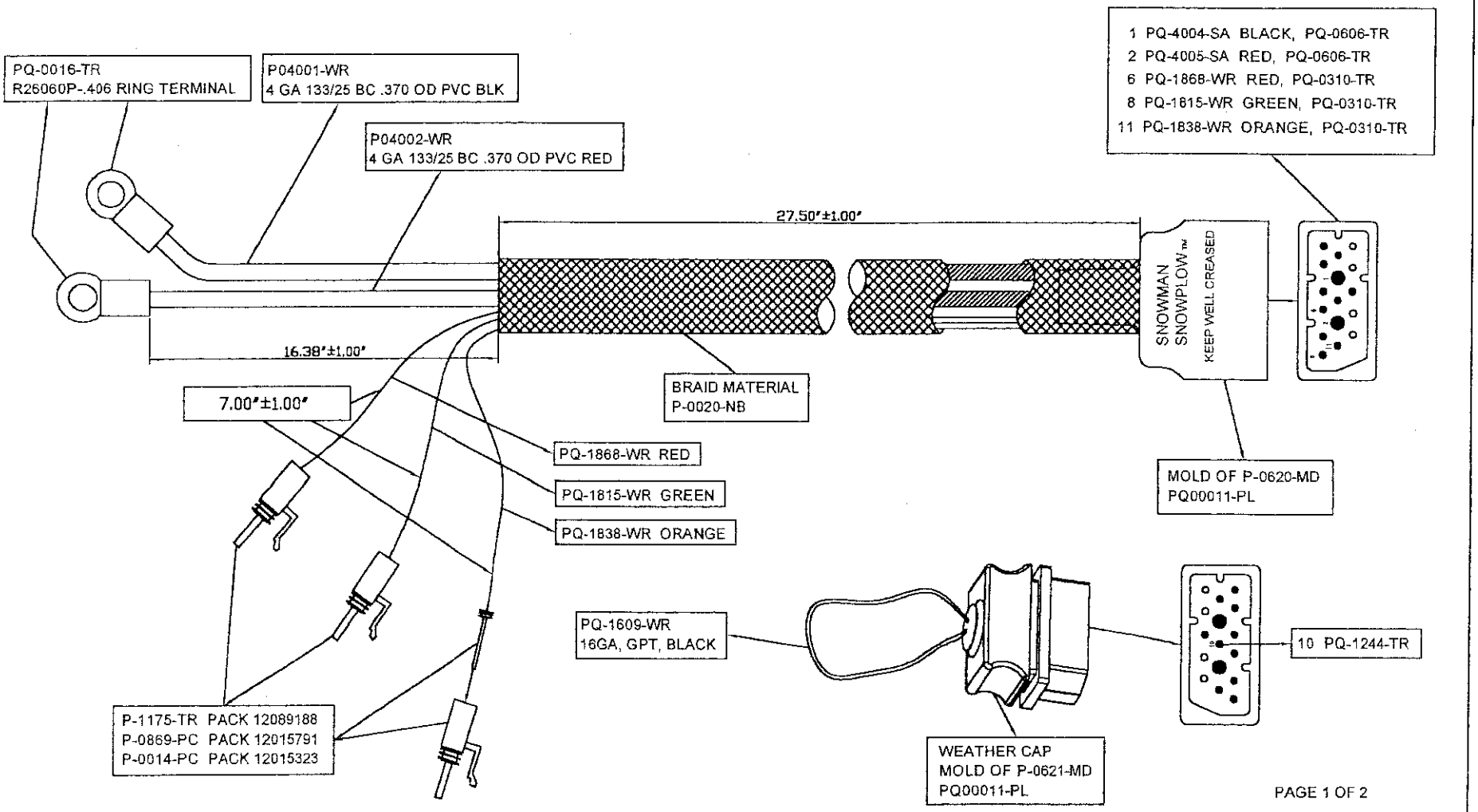

PAGE 1 OF 2

PCA REV	CHANGES	ENG APPR	MANF APPR	VENDOR APPR	CUST APPR	DATE	BY
B	ADD WIRE COLOR					07/25/02	JL
C	ADD PART NUMBER; ADD TOLERANCE					09/20/02	JL
D	RELEASED FOR PROD. ALL PAGES UPDATED TO THE SAME REV. CHANGED 28" TO 27.50", 8" TO 7". CORRECTED RED TO BLACK AND BLACK TO RED.						

EH4001 - 3' Pump Harness

TOLERANCES ARE:
DIM01: ±1.00"
DIM-1: ±0.50"

TITLE: SNOWMAN HARNESS (P-1568-02)

PCA PARTS: PQ-0006-FG (P-5102-FG)

SCALE: N/A

DRAWN BY: JL — DATE: 7/23/02

PCA DWG: PQ-0006-FG-DWG

SIZE: A3

CKD BY: PZ — DATE: 7/23/02

CUSTOMER PARTS: EH4001

PCA REV.: D